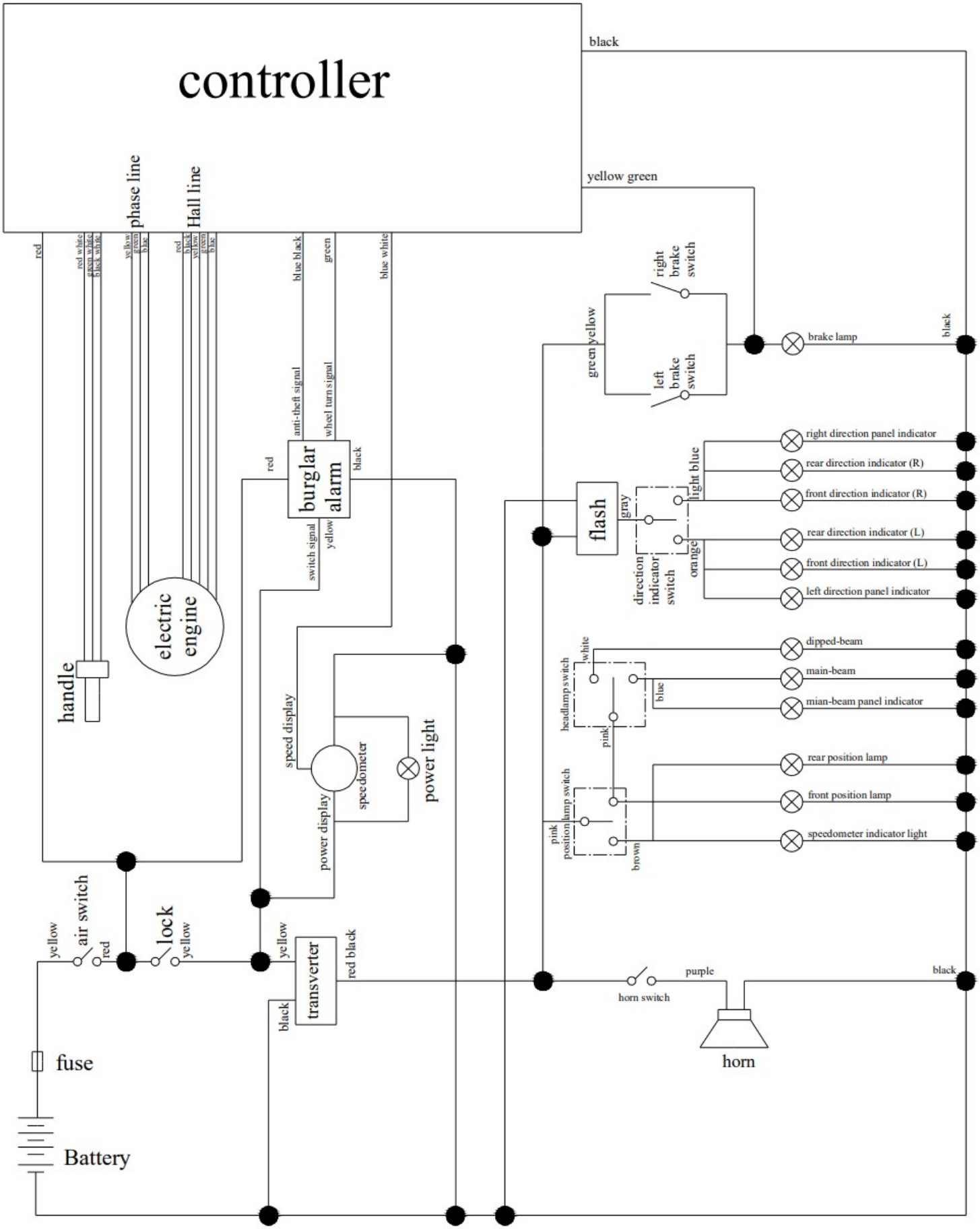

Vehicle Type	LMJR
Electrical schematic	
Drawing No.	LMJR-12-01